Autumn 2026 - Lab 5

41034 - Electronic Components and Fabrication

This laboratory exercise focuses on the design and implementation of a D-latch using S-Edit, followed by the application of clock and data input signals to analyze its behavior. The clock and data signals are generated, and the resulting waveforms are plotted using T-Spice commands in the T-Spice window. The propagation delays and average power consumption are subsequently evaluated from T-Spice.

D-Latch Simulation with T-Spice

A D (Data or Transparent) latch is a simple 1-bit memory circuit used to store data. It has a data input D, a clock signal (CLK), and an output Q. When CLK is high, the latch is transparent, meaning the output Q copies the input D. When CLK is low, the latch stores the last value of D, and Q stays the same even if D changes.

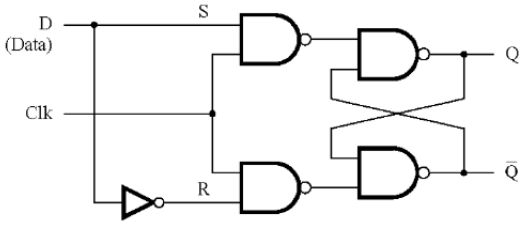

Clk	D	$Q(t+1)$
0	x	$Q(t)$
1	0	0
1	1	1

When Clk=1 the output follows the D input.
When Clk=0 the output cannot be changed.

1. Create the D-latch circuit in S-Edit and obtain the output waveforms

Using the gates developed from the previous labs to build the circuit as in the D-latch diagram. We need 4 NAND gates and one Inverter, power supply VDD and GND as in Figure 2.

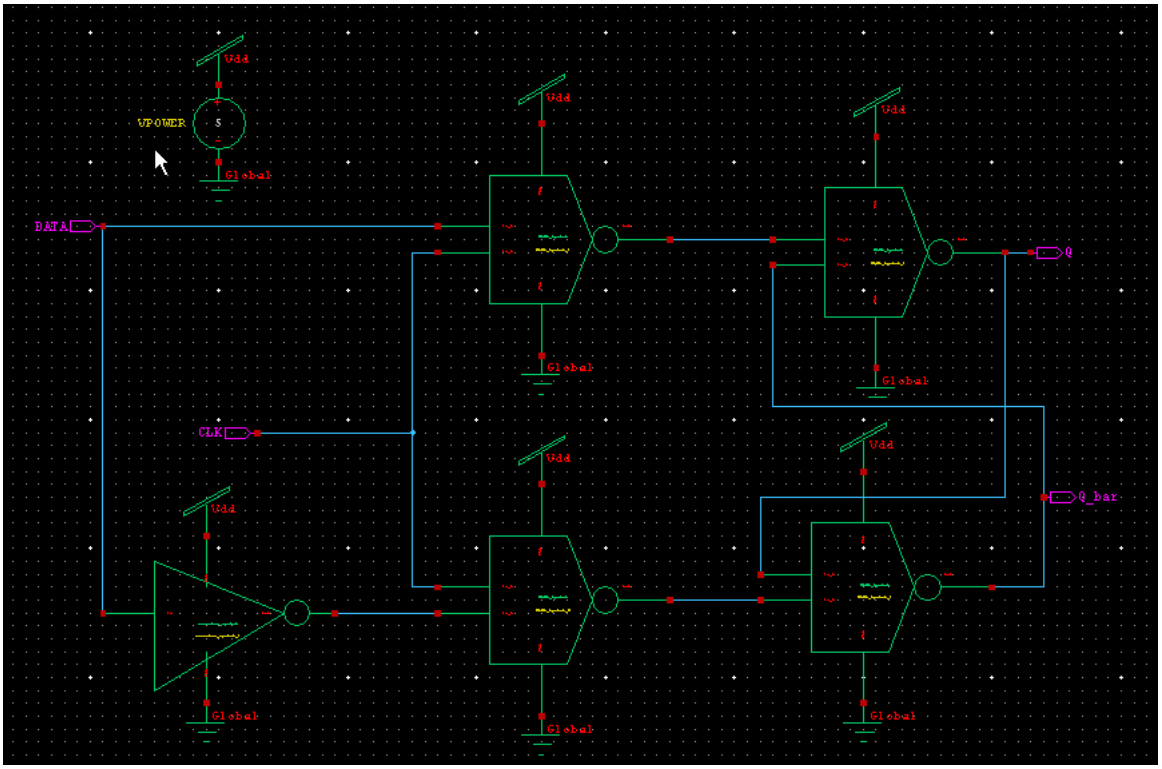

Figure 2. D-latch Circuit in S-Edit

Set up the simulation as in previous labs with

File search Path: [SelectViaServer $gGeneric250nmLibWinPath $gGeneric250nmLibLinuxPath]

Library Files: ../../Process/Generic_250nm/Models/Generic_250nm.lib TT

In this lab, we run simulations in T-Spice directly. Click on the T-spice symbol in the toolbar:

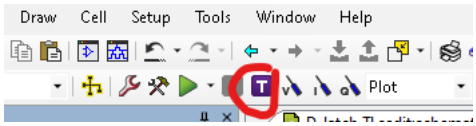

The T-Spice editor will appear, describing the circuit as we drew in S-edit. The T-spice editor should show the following

```
* SPICE export by:      S-Edit 2020.1.0
* Export time:          Fri Feb 20 09:52:16 2026
* Design path:
C:\Users\150309\Documents\TannerEDA\TannerTools_v2020.1\TLsedit\lib.defs
* Library:              TLsedit
* Cell:                 D_latch
* Testbench:            Spice
* View:                 schematic
* Export as:            top-level cell
* Export mode:          hierarchical
* Exclude empty: yes
* Exclude .model: no
* Exclude .hdl:      no
* Exclude .end:      no
* Expand paths:      yes
* Wrap lines:        no
* Exclude simulator commands: no
* Exclude global pins:        no
* Exclude instance locations: no
* Control property name(s): SPICE

********* Simulation Settings - General Section *********
.OPTION
search="C:\Users\150309\Documents\TannerEDA\Process\Generic_250nm\Models"
.LIB
"C:\Users\150309\Documents\TannerEDA\TannerTools_v2020.1\Process\Generic_250nm\M
odels\Generic_250nm.lib" TT
*************** Subcircuits ***************
.subckt NAND_Symbol In_A In_B Out VDD VSS
MMn1 Out In_A N_1 N_1 NMOS25 w=1.5u l=250n m=1 ad=975f pd=4.3u as=975f ps=4.3u
nrd=433.33333m nrs=433.33333m $ $x=5200 $y=2600 $w=400 $h=600
MMn2 N_1 In_B VSS VSS NMOS25 w=1.5u l=250n m=1 ad=975f pd=4.3u as=975f
ps=4.3u nrd=433.33333m nrs=433.33333m $ $x=5200 $y=1700 $w=400 $h=600
MMp1 Out In_A VDD VDD PMOS25 w=1.5u l=250n m=1 ad=975f pd=4.3u as=975f
ps=4.3u nrd=433.33333m nrs=433.33333m $ $x=3500 $y=4000 $w=400 $h=600
MMp2 Out In_B VDD VDD PMOS25 w=1.5u l=250n m=1 ad=975f pd=4.3u as=975f
ps=4.3u nrd=433.33333m nrs=433.33333m $ $x=5200 $y=4000 $w=400 $h=600
.ends
```

```
.subckt inverter_symbol In Out VDD VSS
MMn1 Out In VSS VSS NMOS25 w=1.5u l=250n m=1 ad=975f pd=4.3u as=975f ps=4.3u
nrd=433.33333m nrs=433.33333m $ $x=5600 $y=3000 $w=400 $h=600
MMp1 Out In VDD VDD PMOS25 w=1.5u l=250n m=1 ad=975f pd=4.3u as=975f ps=4.3u
nrd=433.33333m nrs=433.33333m $ $x=5600 $y=4300 $w=400 $h=600
.ends


***** Top Level *****
Xinverter_symbol_1 DATA N_3 Vdd 0 inverter_symbol $ $x=4000 $y=3450 $w=1800
$h=1300
XNAND_Symbol_1 DATA CLK N_1 Vdd 0 NAND_Symbol $ $x=6600 $y=6400 $w=1800
$h=1800
XNAND_Symbol_2 N_1 Q_bar Q Vdd 0 NAND_Symbol $ $x=9200 $y=6300 $w=1800
$h=1800
XNAND_Symbol_3 CLK N_3 N_2 Vdd 0 NAND_Symbol $ $x=6600 $y=3600 $w=1800
$h=1800
XNAND_Symbol_4 Q N_2 Q_bar Vdd 0 NAND_Symbol $ $x=9100 $y=3700 $w=1800
$h=1800
VVPOWER Vdd 0  DC 5 $ $x=4000 $y=7300 $w=400 $h=600

********* Simulation Settings - Analysis Section *********
.op
.TRAN 10p 200n START=0n
.OPTION prtdel=100p

********* Simulation Settings - Additional SPICE Commands *********

.end
```

Now we need to add the pulse source for DATA and CLK inputs, and print the voltage output to the waveform viewer. Type in T-spice Editor the definition for the inputs, plot voltages. Note that Transition Analysis setup can be made in S-edit as in the previous labs.

The syntax to define a pulse node in T-spice:

Vname node+ node- PULSE(Vinitial Von Tdelay Trise Tfall Ton Period)

VVin → name of the voltage source
DATA→ positive terminal node
0 → negative terminal node (ground)
PULSE(...) → waveform type

Add the following syntax below the line starting with VVPOWER within the top-level on T-Spice window

```
VVin DATA 0 PULSE(0 5 0 0 0 10n 20n)
VVin2 CLK 0 PULSE(0 5 0 0 0 20n 40n)
.PLOT V(DATA)
.PLOT V(CLK)
.PLOT V(Q)
.PLOT V(Q_bar)
```

Click the simulation button on the T-Spice window, and the waveform viewer should show the results below

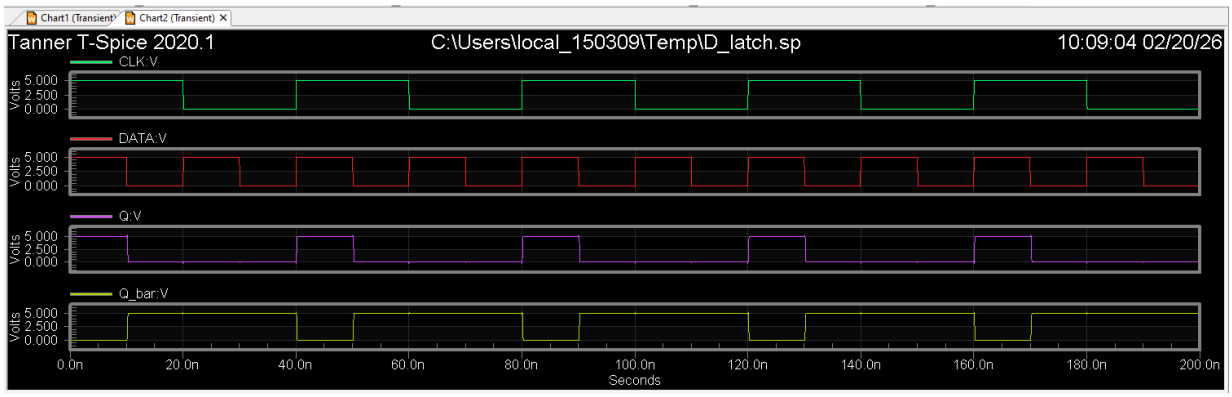

2. Measuring Propagation Delay in T-Spice

Measure the propagation delay from DATA → Q of a D-latch. First, we need to fix CLK at High logic, so the DATA input goes to the Q output:

VVin2 CLK 0 DC 5

Remember to delete the line → VVin2 CLK 0 PULSE(0 5 0 0 0 20n 40n)

Then add the following commands below in order to estimate the propagation delays

```
.MEASURE TRAN tpd_r

+ TRIG v(DATA) VAL='VDD/2' RISE=3

+ TARG v(Q) VAL='VDD/2' RISE=3

.measure tran tpd_f

+ TRIG v(DATA) VAL='VDD/2' FALL=3

+ TARG v(Q) VAL='VDD/2' FALL=3
```

Syntax explanation

- `.MEASURE TRAN`
  Perform a measurement during transient analysis.
- `tpd_r`, `tpd_f`
  Names of the measurements (rising and falling delay).
- `TRIG`
  Defines the **trigger event** (starting time reference).
- `TARG`
  Defines the **target event** (ending time reference).
- `V(DATA)` / `V(Q)`
  Node voltages being monitored.
- `VAL=2.5`
  The threshold voltage used for timing measurement.
  Since $V_{DD} = 5V$, 2.5V corresponds to **50% of VDD**, which is the standard definition for propagation delay.
- `RISE=3`
  Use the **third rising edge** of the signal.

- `FALL=3`
  Use the **third falling edge** of the signal.

The first switching cycles may include startup effects. Using `RISE=3` or `FALL=3` ensures the circuit is in steady-state operation before measuring delay.

The T-Spice window shows the results below;

Measurement result summary

```
tpd_r        =  94.3676p
tpd_f        = 187.3550p
```

Note: A small deviation in the measured values may occur when the NMOS body of the NAND gate is grounded, primarily due to the body effect influencing the device threshold voltage.

The average propagation delay is obtained as

$$t_{pd(avg)} = \frac{t_{pd_r} + t_{pd_f}}{2}$$

3. Measure average power consumption

Make sure the clock is set as a pulse source as usual.

```
VVin2 CLK 0 PULSE(0 5 0 0 0 20n 40n)
```

Add measurement of power

```
.MEASURE TRAN Iavg AVG I(VVPOWER)
.MEASURE TRAN Pavg PARAM='-5*Iavg'
```

SPICE measures I(VVPOWER) as **negative**, because current is going **into** the circuit, so Pavg = -5*Iavg to ensure positive power (5V VDD).

```
Measurement result summary
  Iavg        = -17.6278u
  Pavg        =  88.1389u
```

Note: A small deviation in the measured values may occur when the NMOS body of the NAND gate is grounded, primarily due to the body effect influencing the device threshold voltage.

4. Evaluate the average power consumption under different clock frequencies to verify that power consumption is proportional to operating frequency.

To evaluate the relationship between average power consumption and operating frequency, the circuit is simulated under different clock frequencies. The clock frequency is adjusted by varying the period parameter of the pulse source in the T-Spice command:

VVin2 CLK 0 PULSE(0 5 0 0 0 20n 40n).